www.DataSheet4U.com

SPECIFICATION
For
APPROVAL

( ) Preliminary Specification

(o) Final Specification

Title	12.1˝SVGA TFT LCD

BUYER NAME	IBM
MODEL NAME	Mako-D

SUPPLIER	LG LCD Inc.
MODEL NAME	LP121SL

SIGNATURE	DATE
/	
/	
/	

Please return 1 copy for our confirmation with your signature and comments.

APPROVED BY	DATE
/G.Manager	
REVIEWED BY	
/S.Engineer	
PREPARED BY	
/ Engineer	

Product Engineering Dept.
LG LCD Inc.

www.DataSheet4U.com

DataSheet4U.com

www.DataSheet4U.com

1. General Description

The LG Electronics model LP121SL LCD is a Color Active Matrix Liquid Crystal Display with an integral Cold Cathode Fluorescent Tube(CCFT) back light system. The matrix employs a-Si Thin Film Transistor as the active element. It is a transmissive type display operating in the normally white mode. This TFT-LCD has a 12.1 inch diagonally measured active display area with SVGA resolution(600 vertical by 800 horizontal pixel array). Each pixel is divided into Red, Green and Blue sub-pixels or dots which are arranged in vertical stripes. Gray scale or the brightness of the sub-pixel color is determined with a 6-bit gray scale signal for each dot, thus, presenting a pallete of more than 262,000 colors.

The LP121SL LCD is intended to support applications where low power consumption, weight and thickness are critical factors and graphic displays are important. In combination with the vertical arrangement of the sub-pixels, the LP121SL characteristics provide an excellent flat panel display for office automation products such as portable computers.

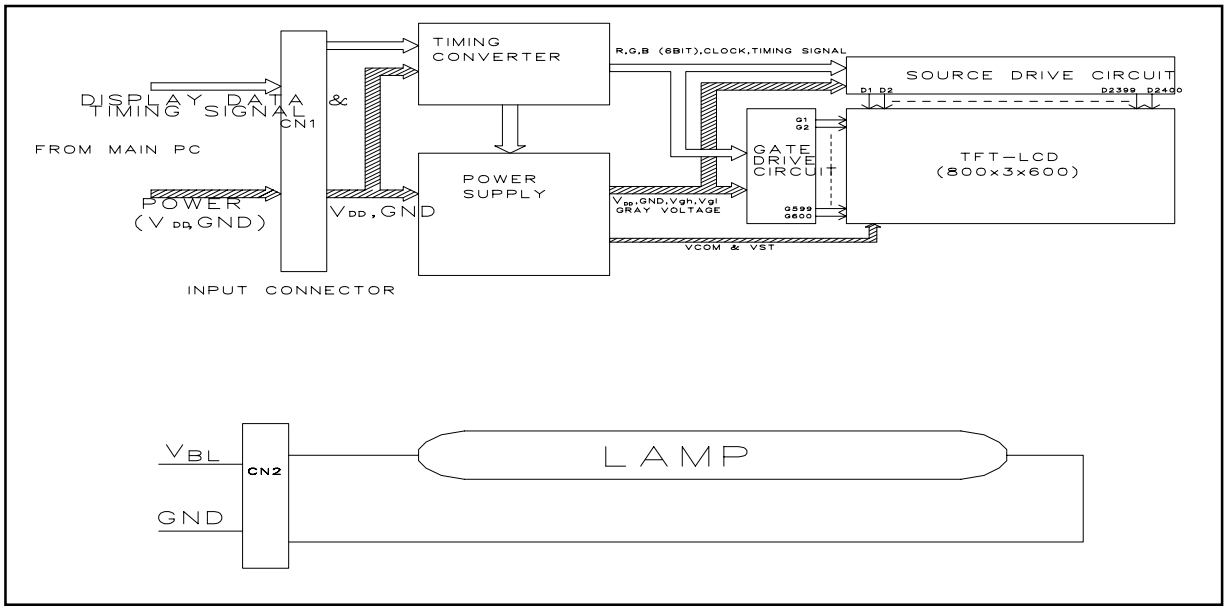

General Display Characteristics

The following are general feature of the model LP121SL LCD;

Active display area	12.1 inches(30.75cm) diagonal
Outsize dimensions	278w * 200h * 6.8t mm
Pixel pitch	0.3075 mm * 0.3075 mm
Pixel format	800 horiz. By 600 vert. pixels RGB stripe arrangement
Color depth	6-bit, 262,144 colors
Display operating mode	transmissive mode, normally white
Surface treatments	hard coating(3 H), anti-glare treatment of the front polarizer(HAZE12%)

www.DataSheet4U.com

DataSheet4U.com

www.DataSheet4U.com

2. Maximum Ratings

The following are maximum values which, if exceeded, may cause faulty operation or damage to the unit.

ABSOLUTE MAXIMUM RATINGS

Parameter	symbol	Values		Units	Notes
		Min.	Max.		
Power Input Voltage	V_{DD}	-0.3	+3.63	Vdc	at 25□
Logic Input Voltage	$V_{L/H}$	V_{SS}	V_{DD}+0.3	Vdc	at 25□
Operating Temperature	T_{OP}	0	+50	□	1
Storage Temperature	T_{ST}	-20	+60	□	1

Note: 1. The Relative Humidity must not exceed 95% non-condensing at temperatures of 40□ or less. At temperatures greater than 40□, the wet bulb temperature must not exceed 39□.

2. Under no condition should the unit be exposed to corrosive chemicals.

3. Electrical Specifications

The LP121SL requires two power inputs. One is employed to power the LCD electronics and to derive the voltages to drive the TFT array and liquid crystal. The second input which powers the backlight CCFT, is typically generated by an inverter. The inverter is an external unit to the LCD.

ELECTRICAL CHARACTERISTICS:

Parameter	Symbol	Values			Units	Notes
		Min.	Typ.	Max.		
MODULE:						
Power Supply Input Voltage	V_{DD}	3.0	3.3	3.6	Vdc	
Power Supply Input Current	I_{DD}	-	276	-	mA	1
Ripple/Noise	-	-	-	-	mV	
Logic Input Level, High	V_{IH}	2.0	-	V_{DD}	Vdc	2
Logic Input Level, Low	V_{IL}	V_{SS}	-	0.8	Vdc	2
Power Consumption	P_C	-	0.91	-	Watts	1
BACKLIGHT:						
Backlight Lamp voltage	V_{BL}	635	705	775	V_{RMS}	
Backlight Lamp Current	I_{BL}	2.0	3.95	5.0	mA	
		-	(150nit)	-		
		-	-	935	V_{RMS}	25□
		-		1300	VRMS	0□
Lamp Kick-Off Voltage	F_{BL}	30	50	70	KHz	
Operating Frequency	P_{BL}	-	4.1(150nit)	-	Watts	3
Power Consumption						

Notes: 1. The current draw and power consumption specified is for 3.3 Vdc at 25□, fv at 60Hz and black signal displayed.
2. Logic levels are specified for V_{DD} of 3.3 Vdc at 25□. The values specified apply to all logic inputs; Hsync, Vsync, clock, data signals, etc.
3. The backlight power consumption includes external inverter's loss.

www.DataSheet4U.com

DataSheet4U.com

www.DataSheet4U.com

4. Optical Specifications

Optical characteristics are determined after the unit has been 'ON' and stable for approximately 30 minutes in a dark environment at 25□. The values specified are at an approximate distance 50cm from the LCD surface at a viewing angle of Φ and θ equal to 0°.

Appendix A presents additional information concerning the specified characteristics.

OPTICAL CHARACTERISTICS

Parameter	Symbol	Values			Units	Notes
		Min.	Typ.	Max.		
Contrast Ratio	CR	80	100	-		1
Surface Brightness, white	SB_{WH}	-	150	-	cd/m^2	2
Brightness Variation	SB_V		1.25	1.45		3
Response Time	Tr				msec	4
Rise Time	Tr_R			50		
Decay Time	Tr_D			50		
CIE Color Coordinates Red	x_R	0.547	0.577	0.607		
	y_R	0.308	0.338	0.368		
Green	x_G	0.280	0.310	0.340		
	y_G	0.533	0.563	0.593		
Blue	x_B	0.128	0.158	0.188		
	y_B	0.127	0.157	0.187		
White	x_W	0.282	0.310	0.338		
	y_W	0.326	0.346	0.366		
Viewing Angle x axis, right (Φ=0°)	θx	+40			degree, °	5 Typ C/R=(25)
x axis, left(Φ=180°)	θx	-40				Typ C/R=(25)
y axis, up(Φ=90°)	θy	+10				Typ C/R=(31)
y axis, down (Φ=270°)	θy	-30				Typ C/R=(18)
Flicker						6
Cross-Talk HORIZENTAL	C/T		1.8	2.5	%	7
VERTICAL	C/T		1.8	2.5	%	7

Notes 1. Contrast Ratio (CR) is defined mathematically as:

$$\frac{\text{(Surface Brightness with all white pixels)}}{\text{(Surface Brightness with all black pixels)}}$$

2. Surface brightness is the average of 9 measurement across the LCD surface 50cm from the surface with all pixels displaying white. For more information see Appendix A-1.

3. The variation in surface brightness, SB_V is determined by measuring B_{ON} at each test position 0 through 9, and then dividing the maximum B_{ON} by the minimum B_{ON}. For more information see Appendix A-1.

$$\frac{\text{Maximum } (B_{ON1}, B_{ON2}, \ldots B_{ON9})}{\text{Minimum } (B_{ON1}, B_{ON2}, \ldots B_{ON9})}$$

4. Response time is the time required for the display to transition from white to black(Rise Time, Tr_R) and from black to white (Decay Time, Tr_D). For additional information see Appendix A-2.

5. Viewing angle is the angle at which the contrast ratio is greater than 10. The angles are determined for the horizontal or x axis and the vertical or y axis with respect to the z axis which is normal to the LCD surface. For more information see Appendix A-3.

www.DataSheet4U.com

DataSheet4U.com

www.DataSheet4U.com

6. When the LCD is refreshed at 60Hz rate with the backlight on, there are no noticeable flicker at gray level 43 when the screen is viewed with naked eye.

7. Cross-Talk check pattern is black window pattern.
The window's grey level is grey0(black) and bottom grey level is grey31.
At this time, measure the brightness of point "A".
Next, change the window's grey level grey0 to grey31.
And measure again the brihtness of point "a"

$$C/T = \frac{\text{brightness of"A"(grey0 window)} - \text{brightness of"A"(grey31 window)}}{\text{brightness of"A"(grey0 window)}} \times 100 \ [\%]$$

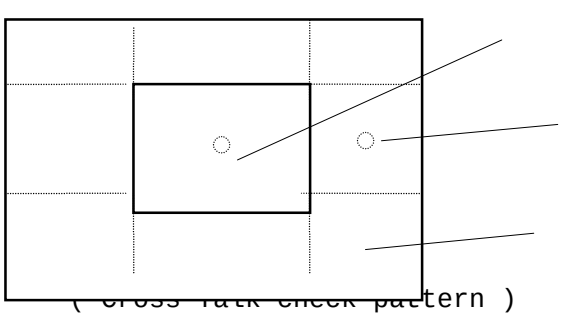

(Cross Talk check pattern)

Luminance of Grey Level

Grey Level	Luminance (%) (min)	Luminance (%) (max)
L0	-	1.3
L7	-	2.3
L15	-	5.0
L23	8	15.5
L31	18	33
L39	35	55.5
L47	59	77
L55	83	97
L63	100	-

www.DataSheet4U.com

DataSheet4U.com

www.DataSheet4U.com

5. environment

5.1 Altitude : operating 0 - 10,000 feet(3048m)
storage/shipment 0 - 40,000 feet(12192m)

5.2 Corrosive gas : Use at indoor & outdoor in a big city.

5.3 environment test condition

No.	Test ITEM	Test conditions
1	High temperature storage test	Ta = 60□ 240h
2	Low temperature storage test	Ta = -20□ 240h
3	High temperature & high humidity operation test	Ta = 40□ 95%RH 240h (no condensation)
4	High temperature operation test	Ta = 50□ 240h
5	Low temperature operation test	Ta = 0□ 240h
6	Vibration test (non-operating)	sine wave, 10~500~10Hz, 1.5G ,0.37oct/min, 3 axis, 1hour/axis
7	Shock test (non-operating)	-half sine wave, 100G, 6ms, one shock of each six faces(i.e. run 100G 6ms for all six faces.) -square wave, 50G, 18ms.(for box packaging)

{Result Evaluation Criteria}
There should be no change which might affect the practical display function when the display quality test is conducted under normal operating condition.

www.DataSheet4U.com

DataSheet4U.com

www.DataSheet4U.com

6. Interface Connections

This LCD employs two interface connections, a 41 pin connector is used for the module electronics and a three pin connector is used for the integral backlight system.

The electronics interface connector is a model DF9-41P-1V, manufactured by Hirose. The mating connector part number is DF9-41S-1V or equivalent. The pin configuration for the connector is shown in the table below.

MODULE CONNECTOR PIN CONFIGURATION

Pin	Symbol	Description	Notes
1	GND	Ground	Connect to Vss, see Note 1
2	DCLK	Dot Clock	
3	GND	Ground	
4	Hsync	Horizontal sync.	Connect to Vss, see Note 1
5	Vsync		
6	GND	Vertical sync.	
7	GND		
8	GND	Ground	Connect to Vss, see Note 1
9	R0	Ground	
10	R1	Ground	Connect to Vss, see Note 1
11	R2	Red data	
12	GND	Red data	Connect to Vss, see Note 1
13	R3	Red data	
14	R4	Ground	Red data(LSB)
15	R5	Red data	
16	GND	Red data	
17	GND	Red data	Connect to Vss, see Note 1
18	GND	Ground	
19	G0	Ground	
20	G1	Ground	
21	G2	Green data	Red data(MSB)
22	GND	Green data	Connect to Vss, see Note 1
23	G3	Green data	
24	G4	Ground	Connect to Vss, see Note 1
25	G5	Green data	
26	GND	Green data	Connect to Vss, see Note 1
27	GND	Green data	
28	GND	Ground	Green data(LSB)
29	B0	Ground	
30	B1	Ground	
31	B2	Blue data	Connect to Vss, see Note 1
32	GND	Blue data	
33	B3	Blue data	
34	B4	Ground	
35	B5	Blue data	Green data(MSB)
36	GND	Blue data	Connect to Vss, see Note 1
37	DTMG	Blue data	
38	NC	Ground	Connect to Vss, see Note 1
39	V_{DD}	Data timing	
40	V_{DD}	No connect	Connect to Vss, see Note 1
41	NC	Power input	
		Power input	Blue data(LSB)
		No connect	
			Connect to Vss, see Note 1
			Blue data(MSB)
			Connect to Vss, see Note 1
			+3.3Vdc
			+3.3Vdc

Connector Pin Arrangement

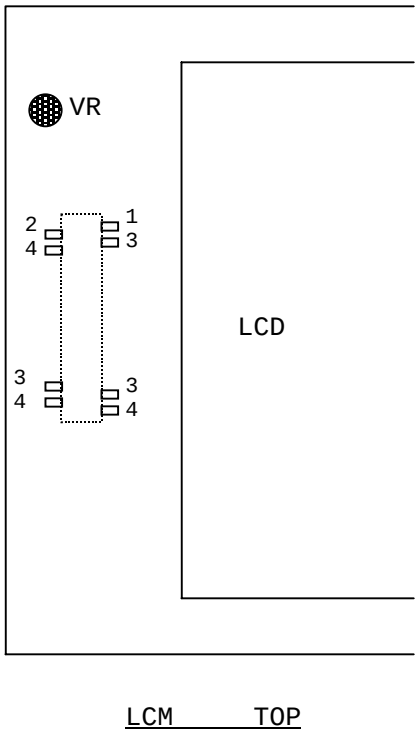

Notes: 1. All GND(ground) pins should be connected together and to Vss which should

www.DataSheet4U.com

DataSheet4U.com

www.DataSheet4U.com

also be connected to the LCD's metal frame.
2. All V_{DD}(power input) pins should be connected together.

www.DataSheet4U.com

DataSheet4U.com

www.DataSheet4U.com

Interface Connections (cont'BHSR-02VS-1, manufactured by JST. The mating connector part number is SM02B-BHSS-1, manufactured by JST.)
The backlight interface connector is a model Br equivalent. The pin configuration for the connector is shown in the table below.

BACKLIGHT CONNECTOR PIN CONFIGURATION

Pin	Symbol	Description	Notes
1	HV	Lamp power input	1
2	LV	Ground	2

Notes: 1. The input power terminal is colored pink.
2. The backlight ground should be common with Vss.

www.DataSheet4U.com

DataSheet4U.com

www.DataSheet4U.com

7. Signal Timing Specification

ITEM		SYMBOL	MIN.	TYP.	MAX.	UNIT	NOTE
DCLK	Frequency	f_{CLK}	-	38.5	40.2	□	
	Width-Low	t_{WCL}	5	-	-	ns	
	Width-High	t_{WCH}	5	-	-		
	Rise Time	t_{rCLK}	-	-	25		
	Fall Time	t_{fCLK}	-	-	25		
	Duty	D	0.45	0.5	0.55	-	$D=t_{CLKL}/T_{clk}$
Hsync	Set up Time	t_{SH}	3	-	-	ns	for DCLK
	Hold Time	t_{HH}	9	-	-		
	Period	t_{HP}	990	1024	1200	t_{CLK}	
	Width-Active	t_{WH}	12	-	128		
	Rise/Fall Time	t_{Hr}, t_{Hf}	-	-	30	ns	
Vsync	Set up Time	t_{SV}	3	-	-	t_{CLK}	for Hsync
	Hold Time	t_{HV}	9	-	-		
	Period	t_{VP}	603	625	730	t_{HP}	
	Width-Active	t_{WV}	1	-	24		
	Rise/Fall Time	t_{Vr}, t_{Vf}	-	-	50	ns	
DTMG	Set up Time	t_{SI}	3	-	-	ns	for DCLK
	Hold Time	t_{HI}	9	-	-		
	Rise/Fall Time	t_{Ir}, t_{If}	-	-	30	ns	
	Horizontal Back Porch	t_{HBP}	32	-	-	t_{CLK}	
	Horizontal Front Porch	t_{HFP}	16	-	-		
	Vertical Back Porch	t_{VBP}	0	-	-	t_{HP}	
	Vertical Front Porch	t_{VFP}	3	-	-		
	Set up Time	t_{SD}	3	-	-	ns	for DCLK

www.DataSheet4U.com

DataSheet4U.com

www.DataSheet4U.com

DATA	Hold Time	t_{HD}	9	-	-		
	Rise/Fall Time	t_{Dr}, t_{Df}	-	-	25	ns	

www.DataSheet4U.com

DataSheet4U.com

www.DataSheet4U.com

8. Signal Timimg Wave forms

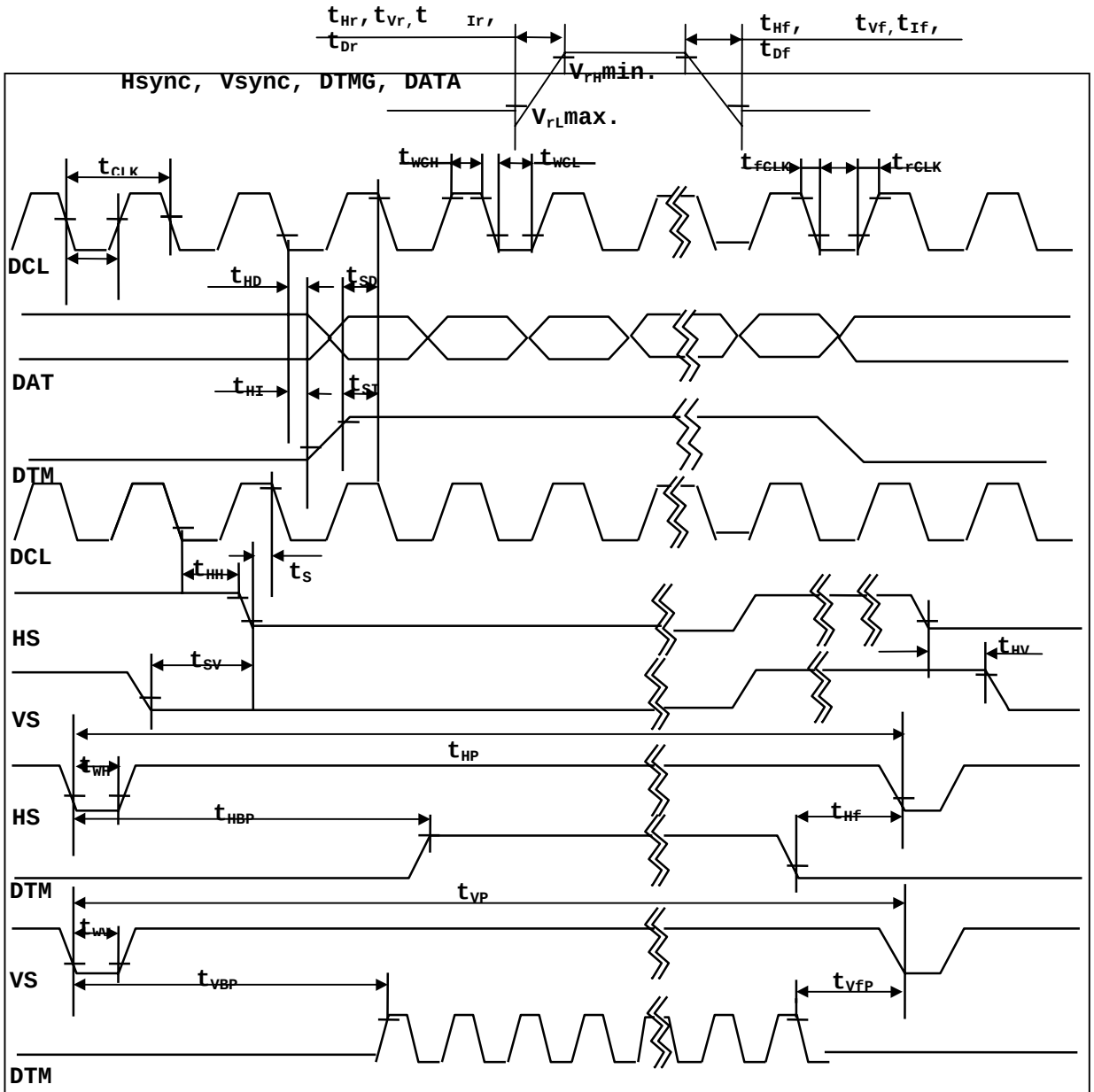

9. Color Input Data Reference

The brightness of each primary color(red, green and blue) is based on the 6-bit

www.DataSheet4U.com

DataSheet4U.com

www.DataSheet4U.com

gray scale data input for the color; the higher the binary input, the brighter the color. The table below provides a reference for color versus data input.

COLOR DATA REFERENCE

Color		Input Color Data																	
		Red						Green						Blue					
		R5	R4	R3	R2	R1	R0	G5	G4	G3	G2	G1	G0	B5	B4	B3	B2	B1	B0
Basic Colors	Black	0	0	0	0	0	0	0	0	0	0	0	0	0	0	0	0	0	0
	Red(63)	1	1	1	1	1	1	0	0	0	0	0	0	0	0	0	0	0	0
	Green(63)	0	0	0	0	0	0	1	1	1	1	1	1	0	0	0	0	0	0
	Blue(63)	0	0	0	0	0	0	0	0	0	0	0	0	1	1	1	1	1	1
	Cyan	0	0	0	0	0	0	1	1	1	1	1	1	1	1	1	1	1	1
	Magenta	1	1	1	1	1	1	0	0	0	0	0	0	1	1	1	1	1	1
	Yellow	1	1	1	1	1	1	1	1	1	1	1	1	0	0	0	0	0	0
	White	1	1	1	1	1	1	1	1	1	1	1	1	1	1	1	1	1	1
Red	Red(00) Black	0	0	0	0	0	0	0	0	0	0	0	0	0	0	0	0	0	0
	Red(01)	0	0	0	0	0	1	0	0	0	0	0	0	0	0	0	0	0	0
	Red(02)	0	0	0	0	1	0	0	0	0	0	0	0	0	0	0	0	0	0
		:	:	:	:	:	:	0	0	0	0	0	0	0	0	0	0	0	0
	Red(61)	1	1	1	1	0	1	0	0	0	0	0	0	0	0	0	0	0	0
	Red(62)	1	1	1	1	1	0	0	0	0	0	0	0	0	0	0	0	0	0
	Red(63)	1	1	1	1	1	1	0	0	0	0	0	0	0	0	0	0	0	0
Green	Green(00) Black	0	0	0	0	0	0	0	0	0	0	0	0	0	0	0	0	0	0
	Green(01)	0	0	0	0	0	0	0	0	0	0	0	1	0	0	0	0	0	0
	Green(02)	0	0	0	0	0	0	0	0	0	0	1	0	0	0	0	0	0	0
		0	0	0	0	0	0	:	:	:	:	:	:	0	0	0	0	0	0
	Green(61)	0	0	0	0	0	0	1	1	1	1	0	1	0	0	0	0	0	0
	Green(62)	0	0	0	0	0	0	1	1	1	1	1	0	0	0	0	0	0	0
	Green(63)	0	0	0	0	0	0	1	1	1	1	1	1	0	0	0	0	0	0
Blue	Blue(00) Black	0	0	0	0	0	0	0	0	0	0	0	0	0	0	0	0	0	0
	Blue(01)	0	0	0	0	0	0	0	0	0	0	0	0	0	0	0	0	0	1
	Blue(02)	0	0	0	0	0	0	0	0	0	0	0	0	0	0	0	0	1	0
		0	0	0	0	0	0	0	0	0	0	0	0	;	:	:	:	:	:
	Blue(61)	0	0	0	0	0	0	0	0	0	0	0	0	1	1	1	1	0	1
	Blue(62)	0	0	0	0	0	0	0	0	0	0	0	0	1	1	1	1	1	0
	Blue(63)	0	0	0	0	0	0	0	0	0	0	0	0	1	1	1	1	1	1

www.DataSheet4U.com

DataSheet4U.com

www.DataSheet4U.com

10. Power Sequence

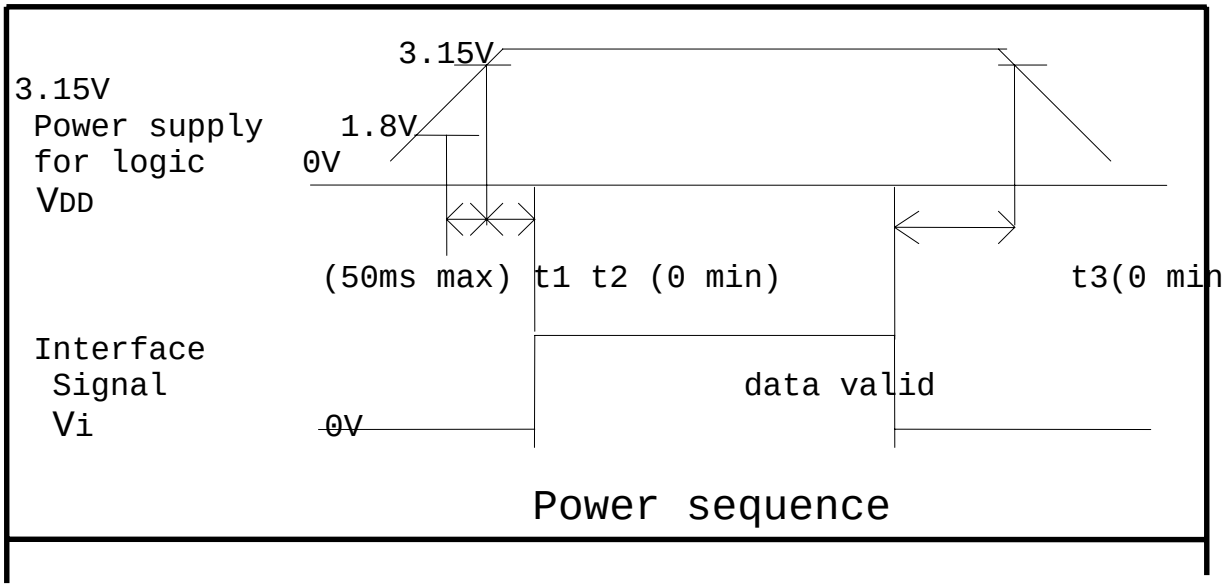

* Set 0 Volt < Vi(t) < V_{DD}(t)

Here Vi(t), V_{DD}(t) indicate the transitive state of Vi, V_{DD} when power supply is turned ON or OFF

Notes: 1. Please avoid floating state of interface signal at invalid period.

2. When the interface signal is invalid, be sure to pull down the power supply for LCD V_{DD} to 0V.

www.DataSheet4U.com

DataSheet4U.com

www.DataSheet4U.com

11. Mechanical Characteristics

The chart below provides general mechanical characteristics for the model LP121SL LCD. The surface of the LCD has an anti-glare coating to minimize reflection and a 3H hard coating to reduce scratching. In addition, the figure below is a detailed mechanical drawing of the LCD. Note that dimension are given for reference purposes only.

Outside dimensions:	Width	278	mm
	Height	200	mm
	Thickness	6.8	mm
Active Display area	Width	246	mm
	Height	184.5	mm
	Diagonal	307.5	mm
Weight (approximate)	388(Max.) gram		

www.DataSheet4U.com

DataSheet4U.com

www.DataSheet4U.com

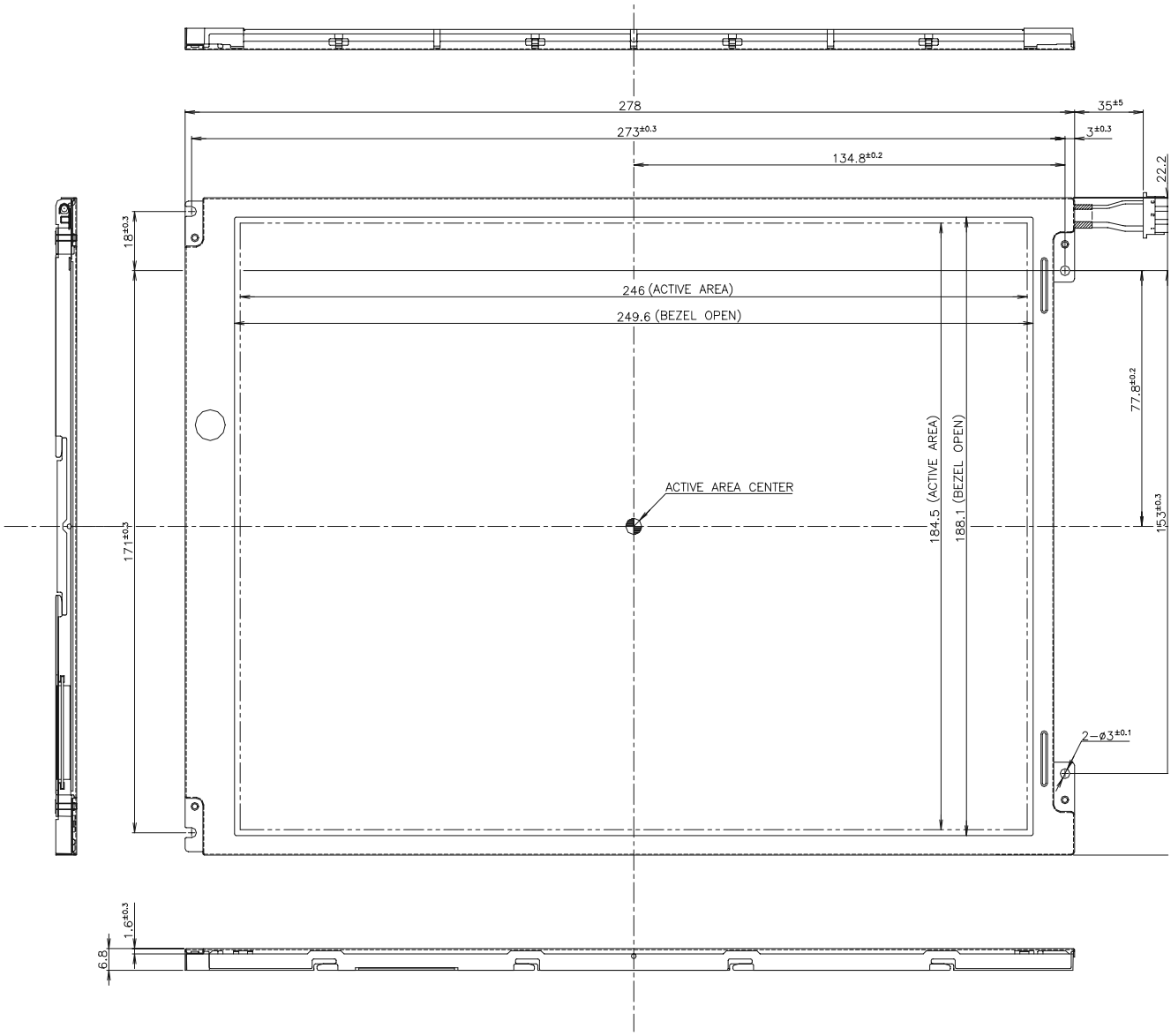

www.DataSheet4U.com

DataSheet4U.com

www.DataSheet4U.com

12. COSMETICS

This cosmetic inspection is related to the acceptance quality levels of any defects
in the LCD module which we produce.
For more information about the following , contact LG Electronics any time.

12.1 Cosmetic Inspection Conditions

12.1.1 Inspective viewing angle

- This inspection should be executed according to the following figure.

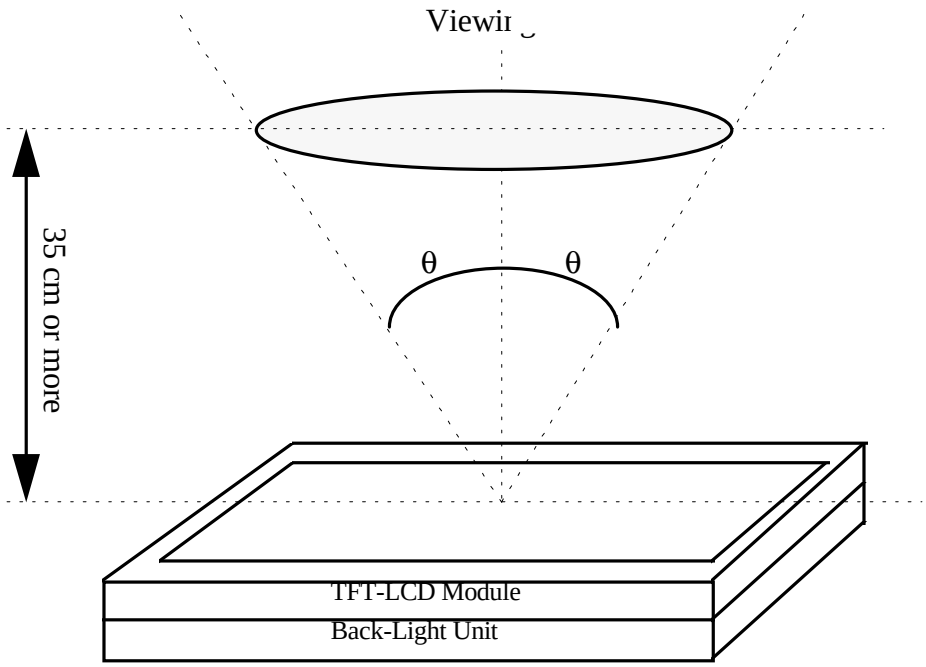

- Viewing angle should be in the range of :

$\theta < 45^{o}$ when non-operating inspection

$\theta < 20^{o}$ when operating inspection (Horizontal direction)

$\theta < 10^{o}$ when operating inspection (Vertical direction)

12.1.2 Environment Conditions

- Ambient temperature : 25 ± 5 ^{o}C
- Ambient Humidity : 65 ±5 % RH
- Ambient Lumination : Using single 20 watts fluorescent lamp (about 500 lux)

www.DataSheet4U.com

DataSheet4U.com

www.DataSheet4U.com

13. Reliability

13.1 Mean Time Between Failure

: The LCD Panel and interface board assembly (excluding the CCFTs) shell have a mean time between failure of 30,000 hours with a confidence level 90%.

(IBM REQUEST : I+ 30 ; 1800 PPM,
FULL FIELD ; 1100 PPM)

13.2 CCFL Life(Continuous)

: The assured CCFL Life will be longer than 10,000 hours at the general test condition.
(The operating life of the lamp is defined as having ended when the illumination of light has reached 50% of the initial value)

13.3 ON/OFF Cycle

: The display module will be capable of being operated over 24,000 ON/OFF cycles (B/L, Vdd ON/OFF)

14. Safety

14.1 Sharp edge :There will be no sharp edges or corners on the display assembly that could cause injury.

14.2 Materials

14.2.1 Toxicity :There is no carcinogenic materials used anywhere in the display module.

14.2.2 Flammability :All components including electrical components of the module meet the flammability grade UL94_V1.
The printed circuit board is made from material rated 94_V1 or better.
The actual UL flammability rating is printed on the printed circuit board.

14.3 Capacitors : If any polarized capacitors are used in the display assembly, provisions will be made to keep them from being inserted backwards.

14.4 Hazardous Voltages : Any points exceeding 42.2volts meet the requirement of the limited current circuit.
The current through a 2 Kohm resistance is less than 0.7 x f(Khz)mA.

15. Packaging

: The packaging of the LCD meets 75 cm drop test.

16. Smoke free design

No smoke or strange smell shall not be observed by the operator as a result of any single failure.
Display technology will demonstrate it to the IBM representative by open/short test in design verification test for approval if there is any default symptoms.

17. Performance

All electromagnetic compatibility apply when the display module is attached

www.DataSheet4U.com

DataSheet4U.com

www.DataSheet4U.com

to the host system.

18. Standard compliance : " UL1950, CUL, IEC950, EN6095"
" ISO9241part3, ANSI/HFS100-1988,DIN66234part1-7,9"

19. PRECAUTIONS

Please pay attention to the followings when you use this TFT/LCD module with Back-
light unit.

19.1 MOUNTING PRECAUTIONS

(1) You must mount a module using holes arranged in four corners.

(2) You should consider the mounting structure so that uneven force (ex. twisted stress) is not applied to the module.
And the case on which a module is mounted should have sufficient strength so that external force is not transmitted directly to the module.

(3) Please attach the surface with a transparent protective plate in order to protect the polarizer LC cell.
Transparent protective plate should have sufficient strength in order to resist external force.

(4) You should adopt radiation structure to satisfy the temperature specification.

(5) Acetic acid type and chlorine type materials for the cover case are not desirable because the former generates corrosive gas of attacking the polalizer at high temperature and the latter causes circuit break by electro-chemical reaction.

(6) Do not touch, push or rub the exposed polarizers with glass, tweezers or anything harder than HB pencil lead. And Please do not rub with dustclothes with chemical treatment.
Do not touch the surface df polarizer for bare hand or greasy cloth.(Some cosmetics are detrimental to the polarizer.)

(7) When the surface becomes dusty, please wipe gently with absorbent cotton or other soft materials like chamois soaked with petrolium benzene. Normal-hexane is recommended for cleaning the adhesives used to attach

www.DataSheet4U.com

DataSheet4U.com

www.DataSheet4U.com

front / rear polarizers. Do not use acetone, toluen and alcohol because they cause chemical damage to the polarizer.

(8) Wipe off saliva or water drops as soon as possible. Their long time contact with polarizer causes deformations and color fading.

(9) Do not open the case because inside circuits do not have sufficent strength.

www.DataSheet4U.com

DataSheet4U.com

www.DataSheet4U.com

19.2 OPERATING PRECAUTIONS

(1) The spike noise causes the mis-operation of circuits. It should be lower than following voltage :

VDD = ± 200mV, V1 = ± 200mV (Over and under shoot voltage).

(2) Response time depends on the temperature. (In lower temperature, it becomes longer.)

(3) Brightness depends on the temperature. (In lower temperature, it becomes lower.)

And in lower temperature, response time (required time that brightness is stable after turned on) becomes longer.

(4) Be careful for condensation at sudden temperature change. Condensation makes damage to polarizer or electrical contacted parts. And after fading condensation, smear or spot will occur.

(5) When fixed patterns are displayed for a long time, remnant image is likely to occur.

(6) A module has high frequency circuit. If you need to shield the electromagnetic noise, please do in yours.

(7) When a Back-light unit is operating, it sounds. If you need to shield the noise, please do in yours.

19.3 ELECTROSTATIC DISCHARGE CONTROL

Since a module is composed of electronic circuits. it is not strong to electrostatic discharge. Make certain that treatment persons are connected to ground through wrist band etc . . And don’t touch I/F pin directly.

19.4 PRECAUTION FOR STRONG LIGHT EXPOSURE

Strong light exposure causes degradation of polarizer and color filter.

19.5 STORAGE

When storing modules as spares for a long time. The following precautions are necessary.

www.DataSheet4U.com

DataSheet4U.com

www.DataSheet4U.com

(1) Store them in a dark place. Do not expose the module to sunlight or fluorescent light. Keep the temperature between 5□ and 35□ at normal humidity.

(2) The polarizer surface should not come in contact with any other object. It is recommended that they be stored in the container in which they were shipped.

19.6 HANDLING PRECAUTIONS FOR PROTECTION FILM

(1) When the protection film is peeled off, static electricity is generated between the film and polarizer.
This should be peeled off slowly and carefully by people who are electrically grounded and with well ion-blown equipment or in such a condition, etc..

(2) The protection film is attached to the polarizer with a small amount of glue. If some stress is applied to rub the protection film against the polarizer during the time you peel off the film, the glue is apt to remain on the polarizer.
Please carefully peel off the protection film without rubbing it against the polarizer.

(3) When the module with protection film attached is stored for a long time, sometimes there remains a very small amount of glue still on the polarizer after the protection film is peeled off.

(4) You can remove the glue easily. When the glue remains on the polarizer surface or its vestige is recognized, please wipe it off with absorbent cotton waste or other soft material like chamois soaked with normal-hexane.

www.DataSheet4U.com

DataSheet4U.com

www.DataSheet4U.com

A-1 Brightness

<measuring point for brightness vibration>

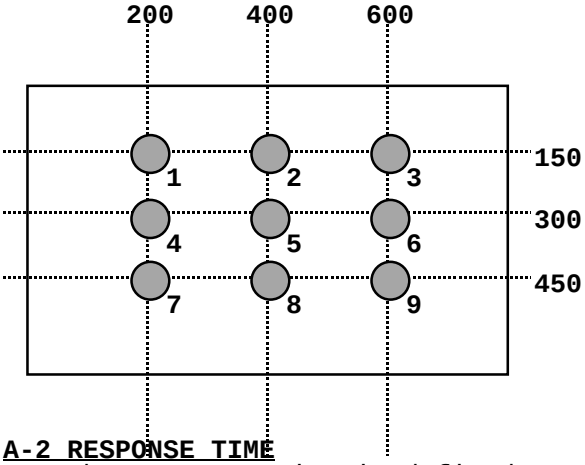

<measuring point for brightness vibration>

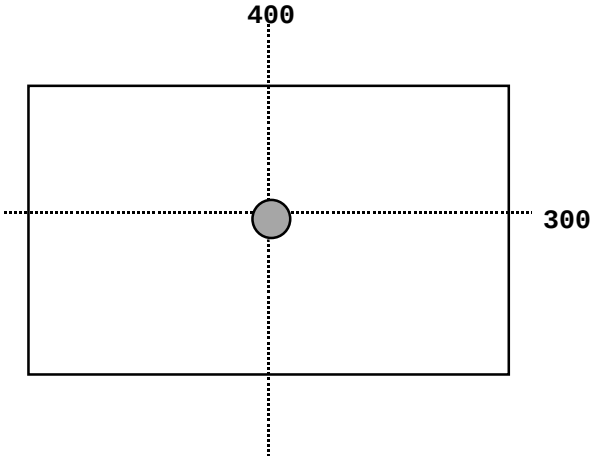

A-2 RESPONSE TIME

The response time is defined as the following figure and shall be measured by switching the input signal for “black” and “white”.

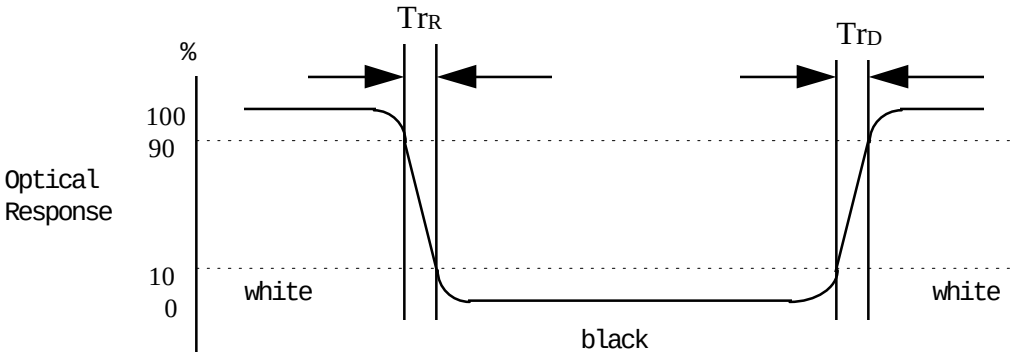

www.DataSheet4U.com

DataSheet4U.com

www.DataSheet4U.com

A-3 Viewing angle

<Definition of viewing angle range>

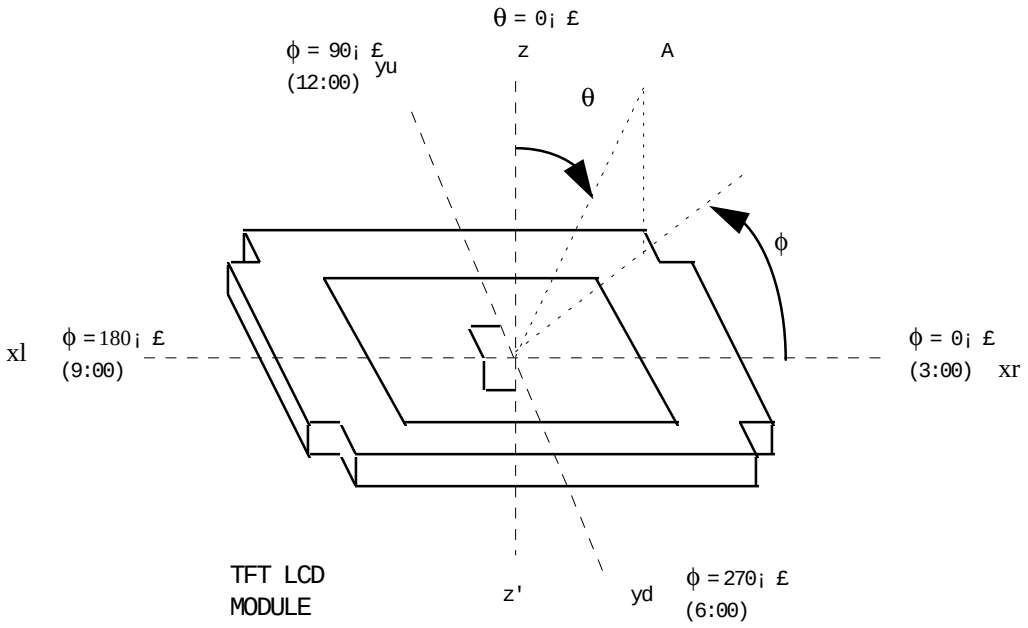

www.DataSheet4U.com

DataSheet4U.com